FCB16-00

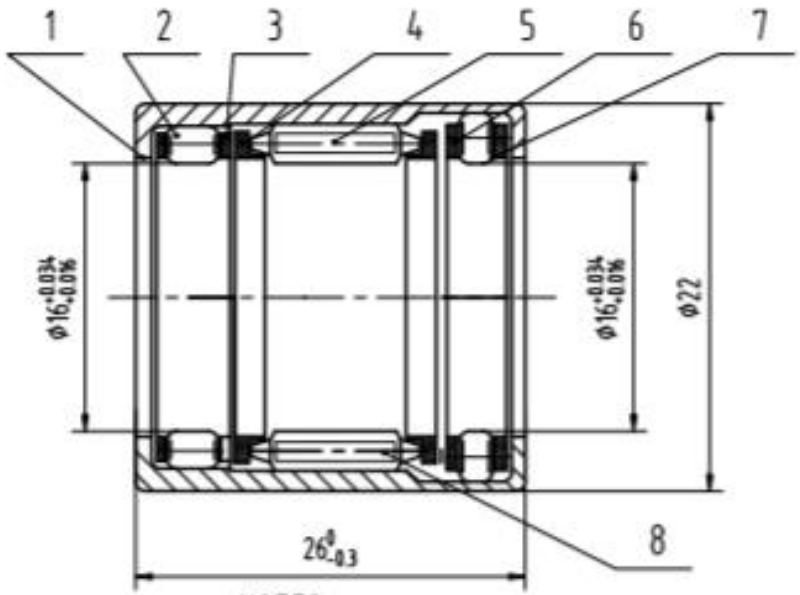


NOTES

1. PRESS INTO THE RING Φ21.976
   CHECK Φ16 +0.034 +0.016
2. CHECK WITH THE PLUG Φ16.016 AND Φ16.034,
   ONE WAY LOCK TRUSTINESS,FREE OVERRUNNING
3. TORQUE RATING 20.5N.m

| | | | | | | | |
|---|---|---|---|---|---|---|---|
| 08 | FCB16-03 | SPRING | 7 | SUS304 | | | |
| 07 | FCB16-04C | NEEDLE ROLLER | 17 | 304C | | | P2.35×3.4 |
| 06 | FCB16-46C | CAGE | 1 | PA66+GF25 | | | |
| 05 | FCB16-04B | NEEDLE ROLLER | 21 | 304C | | | P2.2×10.8 |
| 04 | FCB16-46 | CAGE | 1 | PA66+GF25 | | | |
| 03 | FCB16-46A | CAGE | 1 | PA66+GF25 | | | |
| 02 | FCB16-04A | NEEDLE ROLLER | 19 | 304C | | | P1.92×3.4 |
| 01 | FCB16-01 | OUTER RING | 1 | 316SS | | | |

ONE WAY CLUTCH

BOCA BEARING
Ceramic Bearings for Industry and Recreation
www.bocabearings.com

FCB16-00