MR148-ZZC #5

Radial Play:
Max: 0.013mm
Min: 0.002mm

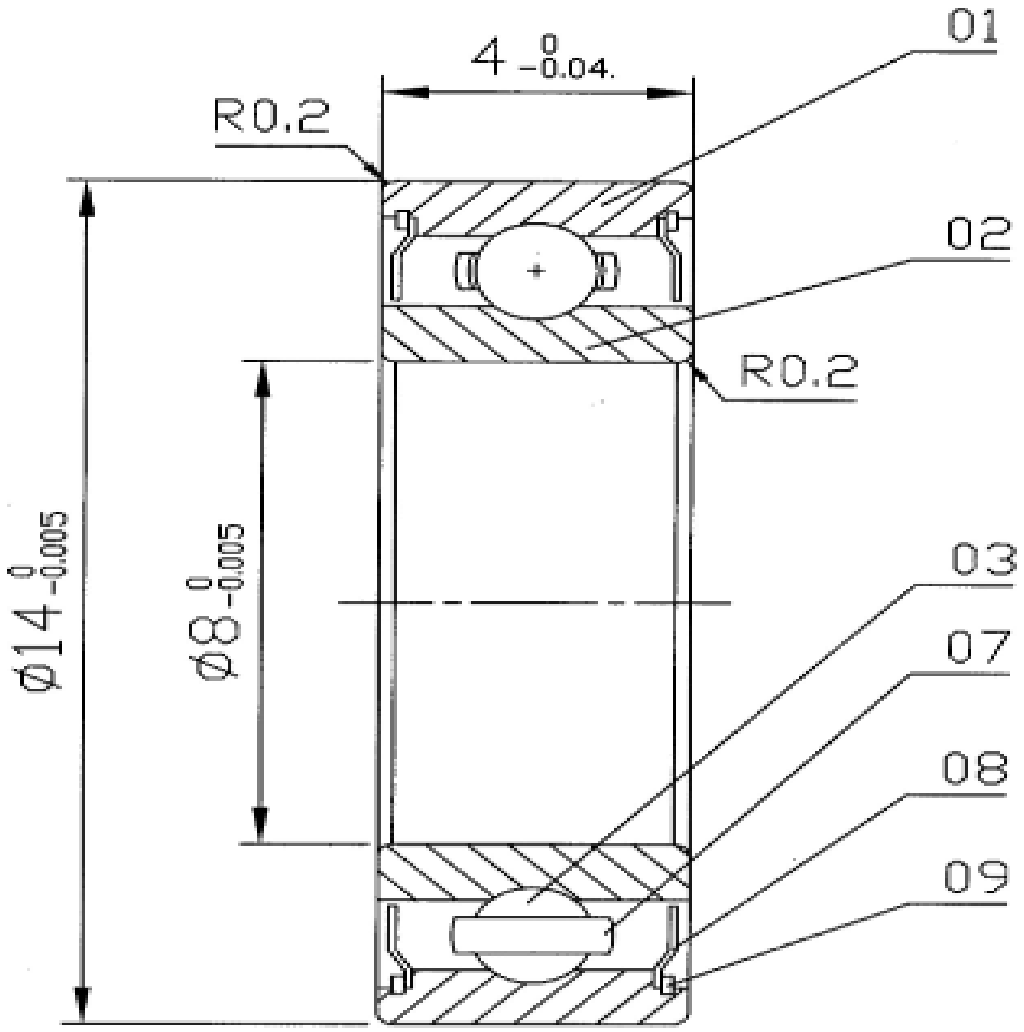

NO.	Part No.	NAME	QTY	Material	Remark
6	09	Clips	2	Spring Steel Tape	
5	08	Shields	2	Steel Tape	08F
4	07	Cage	1	Steel Tape	08F
3	03	Balls (Ø1.588)	8	Chrome Steel	AISI 52100
2	02	Inner Ring	1	Chrome Steel	AISI 52100
1	01	Outer Ring	1	Chrome Steel	AISI 52100

BOCA BEARING
Ceramic Bearings for Industry and Recreation
www.bocabearings.com

BOCA BEARING COMPANY

BOCA