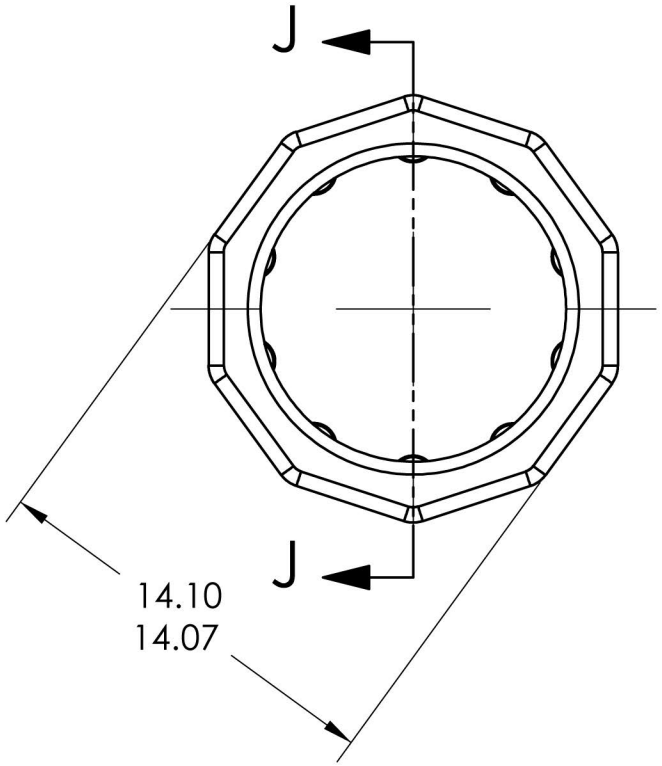

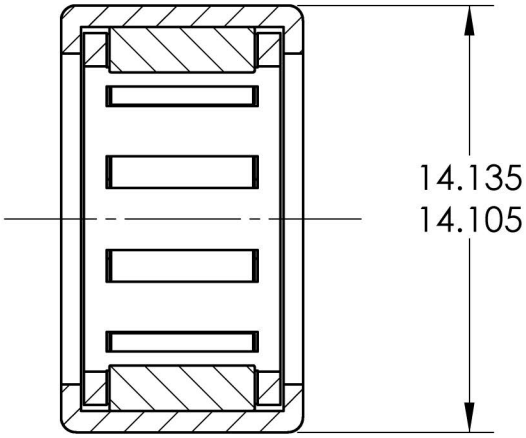

SECTION J-J
SCALE 4 : 1

NOTE
1. THIS HF1008 OD IS MODIFIED TO SATISFY CUSTOMER UNIQUE REQUIREMENT.

THIS DRAWING CONTAINS PROPRIETARY INFORMATION WHICH IS THE PROPERTY OF BOCA BEARING & BEARING TECHNOLOGY INC. DO NOT IN WHOLE OR IN PART DUPLICATE OR DISCLOSE WITHOUT PRIOR WRITTEN PERMISSION.

BOCA Bearing Company			
DESCRIPTION: S-HF1008-SP			
DRAWN BY: SW	DATE: 5-08-2017		SIZE A
APPROVED: SW	PART NUMBER: HF-1008 OD MOD		REV. --
SCALE: 2:1	SHEET 1 OF 1		