SMF85C-YZZ.AF2

1.CLEARANCE: Max 0.002 mm
Min 0.013 mm

2.LOADING: Cr=182N
Cor=72N

3.OIL LUBRICATION

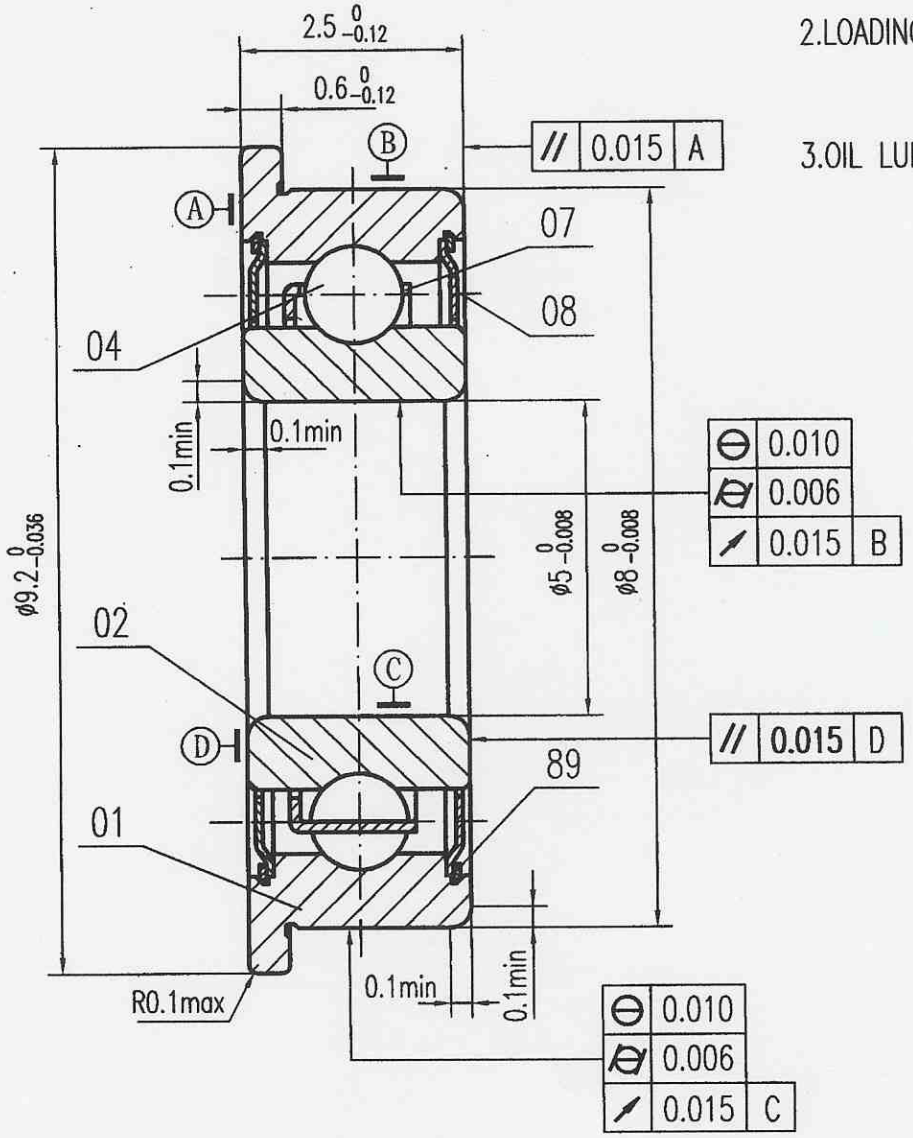

PART NO.	PART	QTY	MATERIAL			REMARK
89	CIRCLIP	2	AISI 303			
08	SHIELD	2	AISI 303			
07	CROWN CAGE	1	AISI 303			
04	CERAMIC BALL	9	Si3N4			Sø0.8
02	INNER RING	1	AISI 440C			
01	OUTER RING	1	AISI 440C			

SMF85C-YZZ.AF2