SMR699C-2YS

Radial Play:
Max: 0.013mm
Min: 0.002mm

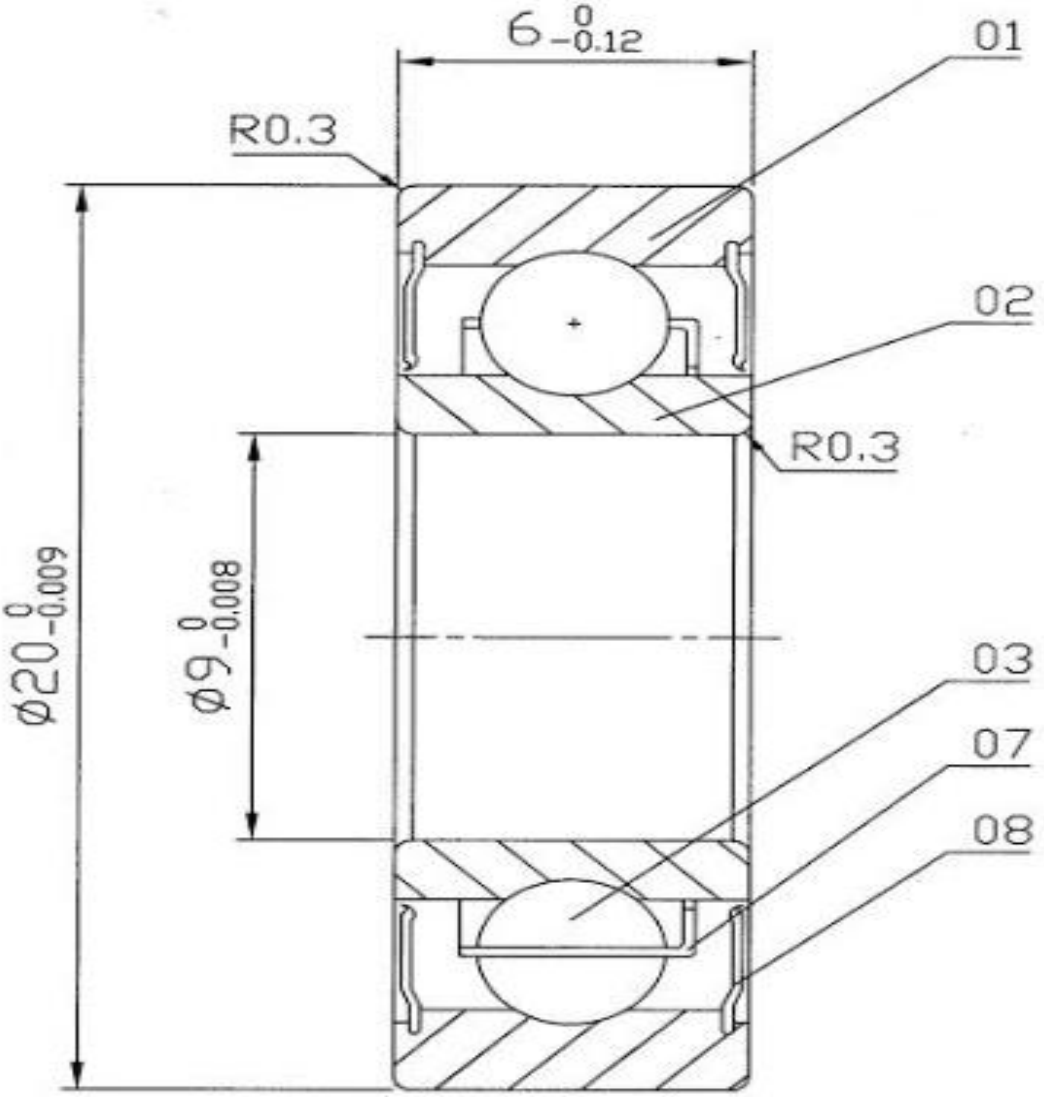

5	08	Seals	2	Rubber	BUNA-N
4	07	Retainer	1	Stainless Steel Tape	AISI 304
3	03	Balls (Ø3.175)	8	Ceramic	SI3N4
2	02	Inner Ring	1	Stainless Steel	AISI 440C
1	01	Outer Ring	1	Stainless Steel	AISI 440C
NO.	Part No.	NAME	QTY	Material	Remark

BOCA BEARING
Ceramic Bearings for Industry and Recreation
www.bocabearings.com

SMR699C-2YS

BOCA BEARING COMPANY

BOCA